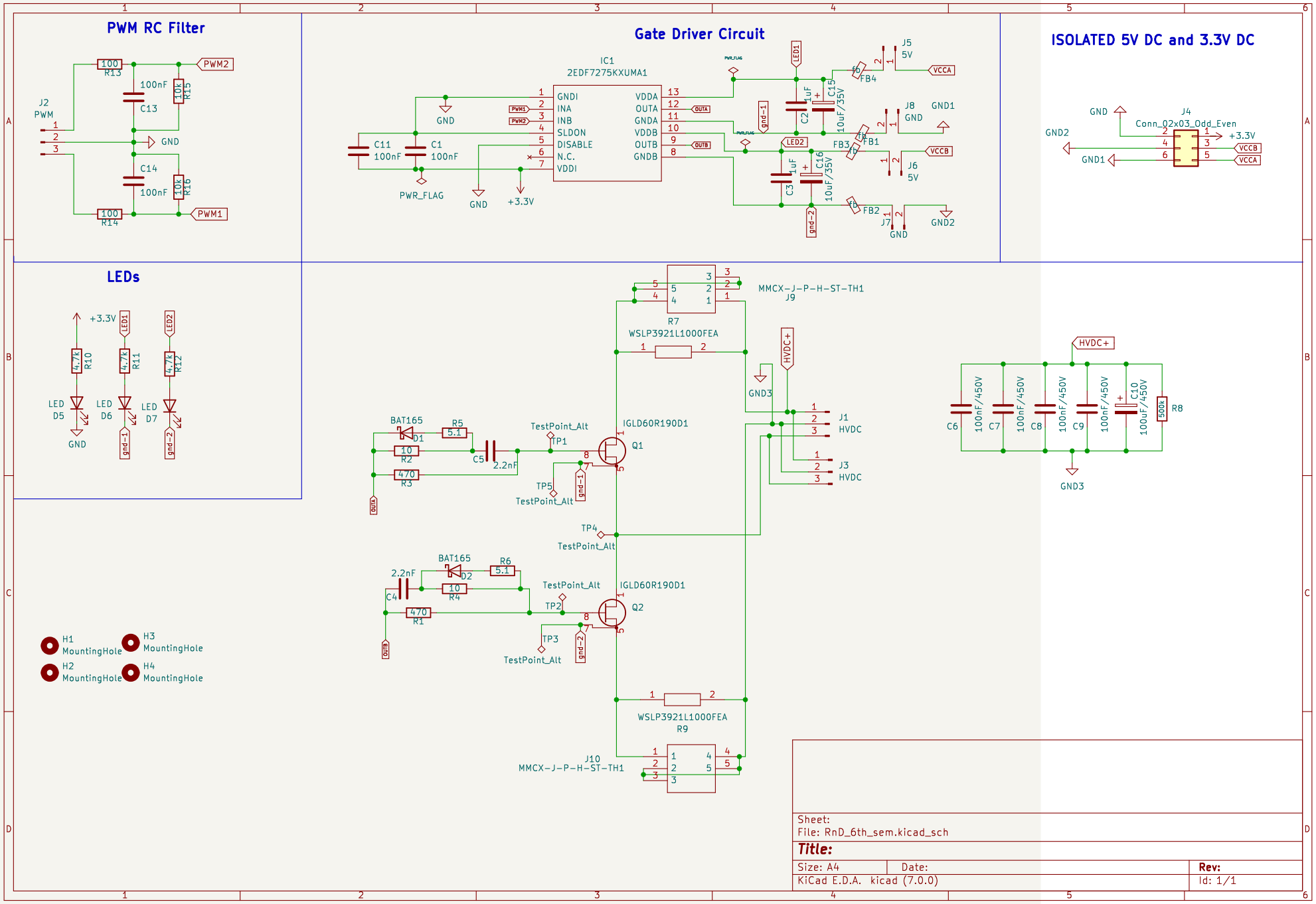
PWM RC Filter
J2
PWM
100
R13
100nF
C13
10k
R15
PWM2
GND
C14
100nF
10k
R16
100
R14
PWM1
Gate Driver Circuit
IC1
2EDF7275KXUMA1
GNDI
INA
INB
SLDON
DISABLE
N.C.
VDDI
VDDA
OUTA
GNDA
VDDB
OUTB
GNDB
C11
100nF
C1
100nF
PWR_FLAG
GND
+3.3V
LED1
LED2
C2
1uF
C15
10uF/35V
C3
1uF
C16
10uF/35V
FB4
FB3
FB1
FB2
J5
5V
J8
GND
J6
5V
J7
GND
GND1
GND2
VCCA
VCCB
gnd-1
gnd-2
ISOLATED 5V DC and 3.3V DC
J4
Conn_02x03_Odd_Even
GND
GND2
GND1
+3.3V
VCCB
VCCA
LEDs
+3.3V
4.7k
R10
4.7k
R11
4.7k
R12
LED
D5
LED
D6
LED
D7
GND
gnd-1
gnd-2
MMCX-J-P-H-ST-TH1
J9
R7
WSLP3921L1000FEA
HVDC+
GND3
J1
HVDC
J3
HVDC
BAT165
D1
R5
5.1
10
R2
470
R3
C5
2.2nF
TestPoint_Alt
TP1
TP5
IGLD60R190D1
Q1
TP4
BAT165
D2
R6
5.1
2.2nF
C4
10
R4
470
R1
TP2
TP3
IGLD60R190D1
Q2
WSLP3921L1000FEA
R9
J10
MMCX-J-P-H-ST-TH1
C6
100nF/450V
C7
100nF/450V
C8
100nF/450V
C9
100nF/450V
C10
100uF/450V
500k
R8
H1
MountingHole
H2
MountingHole
H3
MountingHole
H4
MountingHole
Sheet:
File: RnD_6th_sem.kicad_sch
Title:
Size: A4
Date:
Rev:
KiCad E.D.A. kicad (7.0.0)
Id: 1/1